NOTE: ON RAMPS THAT ARE PERPENDICULAR WITH THE CURB LINE, THE DOME PATTERN SHALL BE IN-LINE WITH THE DIRECTION OF TRAVEL.

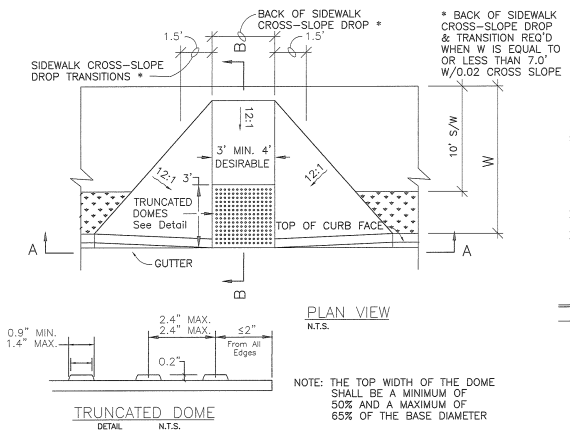

* BACK OF SIDEWALK CROSS-SLOPE DROP & TRANSITION REQ'D WHEN W IS EQUAL TO OR LESS THAN 7.0' W/0.02 CROSS SLOPE

PLAN VIEW
N.T.S.

TRUNCATED DOME
DETAIL N.T.S.

NOTE: THE TOP WIDTH OF THE DOME SHALL BE A MINIMUM OF 50% AND A MAXIMUM OF 65% OF THE BASE DIAMETER

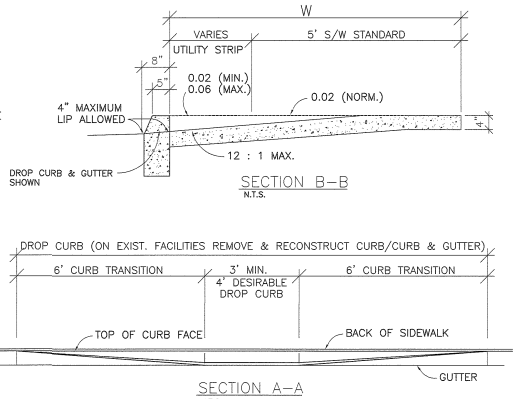

SECTION B-B
N.T.S.

SECTION A-A
N.T.S.

CURB CUT RAMP – FOR HANDICAP
SCALE: N.T.S.

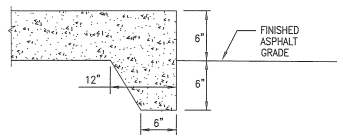

NOTE: WHERE THE SIDEWALK IS ADJACENT TO ASPHALT PAVEMENT, THE SIDEWALK SHALL ABUT THE ASPHALT WITH A TURNDOWN EDGE (SEE ABOVE), EXCEPT AT HANDICAPPED ACCESSIBLE PARKING SPACES, AND THAT SHALL BE AT SAME ELEVATION AS THE TOP OF SIDEWALK.

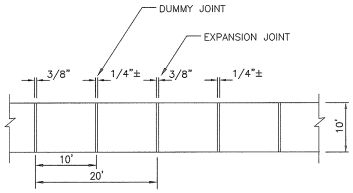

PLAN VIEW
SCALE: N.T.S.

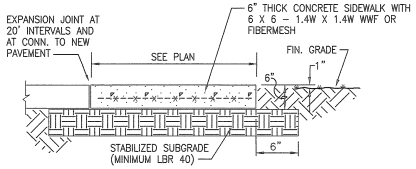

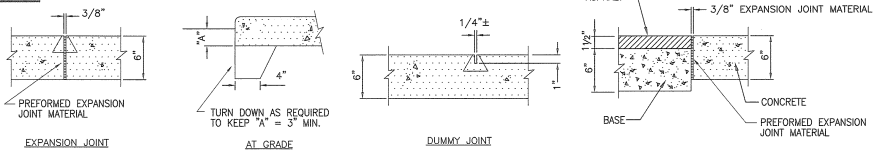

TYPICAL CONCRETE SIDEWALK AND TRAIL
SCALE: N.T.S.

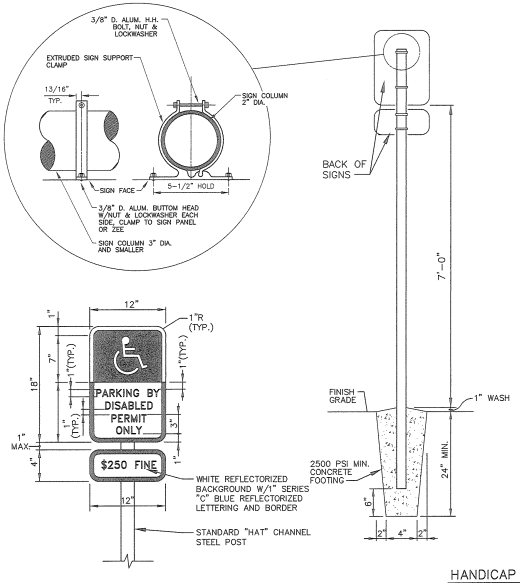

HANDICAP PARKING AND STRIPING DETAILS
SCALE: N.T.S.

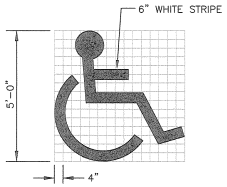

HANDICAPPED PAVEMENT SYMBOL

CONCRETE FOOTING PLAN VIEW

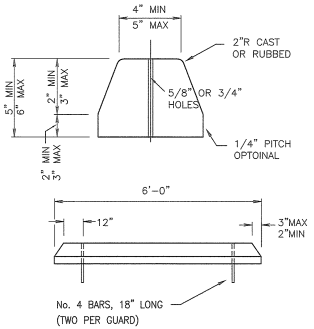

NOTES:

1. PRECAST CONCRETE SHALL BE 3000 PSI MIN. @ 21 DAYS.

CONCRETE WHEEL STOP
SCALE: N.T.S.

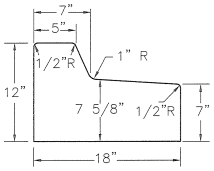

MEDIAN CURB
SCALE: N.T.S.

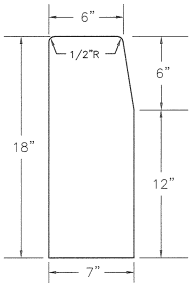

HEADER CURB
SCALE: N.T.S.

NO.	BY	DATE	REVISIONS	NO.	BY	DATE	REVISIONS
6				6			
5				5			
4				4			
3				3			
2				2			
1				1			

DESIGNER H.S.K.
DRAWN BY J.M.S.
DATE JAN., 2009
CHECKED BY F.E.G.
DATE JAN., 2009

THE R-A-M PROFESSIONAL GROUP, INC.
CIVIL AND ELECTRICAL ENGINEERING - LANDSCAPE ARCHITECTURE
8298 BAYBERRY ROAD - JACKSONVILLE, FL 32256 - (904) 731-5445
CERT. OF AUTH. 00006469 - CERT. OF AUTH. 26000197
FRANK E. GRAY, P.E., FLA. REG. No. 43053

CLAY COUNTY
PARKS AND RECREATION DEPARTMENT

PROJECT NO: 205-005-04
DATE: JANUARY, 2009
SCALE: N.T.S.

PARK SITE DETAILS
MOCCASIN SLOUGH PARK

TOTAL No. SHEETS
DRAWING No. C-12